# 60W Constant Voltage Waterproof LED Driver SMV-60 Series



Size：190*49*34mm

## Features:

- Constant voltage power supply
- 85~264VAC input range
- Small volume,low weight,high efficiency
- Protections:short circuit/overload/over voltage/over temp
- Cooling by free air convection
- Fully encapsulated with Ip67 level
- 100% full load burn-in test
- 2 years warranty

ISO9001:2008 CE RoHS

## SPECIFICATION

| Model | | SMV-60-12 | SMV-60-15 | SMV-60-24 | SMV-60-36 | SMV-60-48 |
|---|---|---|---|---|---|---|
| Output | DC voltage | 12V | 15V | 24V | 36V | 48V |
| | Rated current | 5A | 4A | 2.5A | 1.7A | 1.3A |
| | Current range | 0 ~ 5A | 0~4A | 0 ~2.5A | 0 ~ 1.7A | 0 ~ 1.3A |
| | Rated power | 60W | 60W | 60W | 61.2W | 62.4W |
| | Ripple&noise | 50mVp-p | 50mVp-p | 80mVp-p | 100mVp-p | 100mVp-p |
| | Voltage tolerance | ±1.0% | ±1.0% | ±1.0% | ±1.0% | ±1.0% |
| | Line regulation | ±0.5% | ±0.5% | ±0.5% | ±0.5% | ±0.5% |
| | Load regulation | ±0.5% | ±0.5% | ±0.5% | ±0.5% | ±0.5% |
| | Set up,rise time | 200ms,50ms,30ms | | | | |
| | Hold up time ( Typ.) | 30ms/230VAC | | | | |
| Input | Voltage range | 85~264VAC or 120~373VDC | | | | |
| | Frequency | 47 ~ 63Hz | | | | |
| | Efficiency | 82% | 82% | 84% | 84% | 85% |
| | AC current | 0.8A/230V | | | | |
| | Inrush current | Cold start: 45A/230V | | | | |
| | Leakage current | <1.5mA/240VAC | | | | |
| Protection | Overload | Rated output power 105%~135% start overload protection | | | | |
| | | Protection type:hiccup mode,auto-recovery after fault condition is removed | | | | |
| | Over voltage | Rater output power 135%~150% start over voltage protection | | | | |
| | | Protection type:Shut down o/p voltage, re-power on to recover | | | | |
| | Over temperature | When temperature of transistor inner node is over 105℃,start over temperature protection | | | | |
| | | Protection type:Shut down o/p voltage, re-power on to recover | | | | |
| Environment | Working temperature | -10℃～+60℃ | | | | |
| | Working humidity | 20-90%RH | | | | |
| | Storage temp,humidity | -20～+85℃, 20%-90%RH | | | | |
| | Temp.coefficient | ±0.03%℃(0-50℃) | | | | |
| | Vibration | 10 ~ 500Hz, 5G 12min./1cycle, period for 72min. each along X, Y, Z axes | | | | |
| Safety & EMC | Safety standards | Compliance to:CE和GB4943.1 safety standards | | | | |
| | Withstand voltage | I/P-O/P:1.5KVAC 1minute I/P-FG:1.5KVAC 1minute O/P-PG:0.5KVAC 1minute | | | | |
| | Isolation resistance | I/P-O/P, I/P-FG, O/P-FG:100M Ohms / 500VDC / 25℃/ 70% RH | | | | |
| | EMC emission | EN61000-3-2:2014/EN61000-3-3:2013 | | | | |
| | EMC immunity | EN 55032:2015/EN55035:2017/60950-1 | | | | |
| Others | MTBF | ≥327.9K hrs MIL-HDBK-217F(25℃) | | | | |
| | Size | L190*W49*H34mm | | | | |
| | Packing | 0.55KG | | | | |
| Note | 1. All parameters NOT specially mentioned are measured at 230VAC input,rated load and 25℃ of ambient temperature.<br>2. Ripple&noise are measured at 20MHz of bandwidth by using a 12 "twisted pair -wire terminated with a 0.1uf and 47uf parallel capacitors.<br>3. Tolerance:includes set up tolerance,line regulation and load regulation.<br>4. Derating output is required under low input voltage. Please refer to the derating curve for details.<br>5. The power supply should be considered as a part of the components in the system. All EMC tests will test the test samples on a metal iron plate with a thickness of 1mm, a length of 360mm * width of 360mm. | | | | | |

# 60W Constant Voltage Waterproof LED Driver SMV-60 Series

## Mechanical specification

Unit:mm

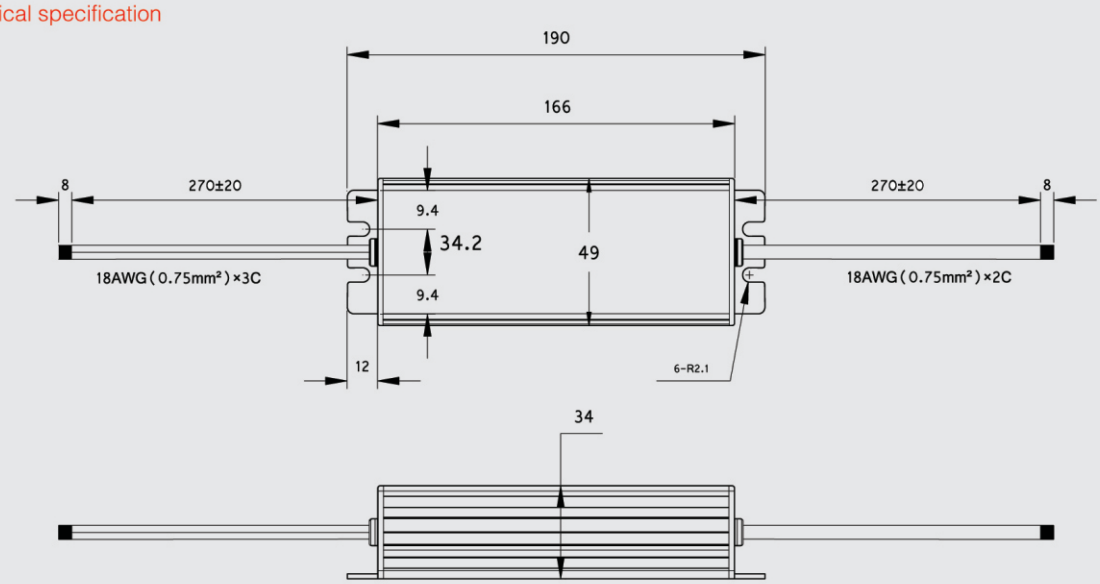


lead-out wire assignment

| Input(Black three-core) | | Output (White two-core) | |
|---|---|---|---|
| Brown | AC/L | Red | DC OUTPUT +V |
| Blue | AC/N | Black | DC OUTPUT -V |
| Yellow-green | FG ⏚ | Shell connect with earth | |

Frequency：60KHz

## Block diagram

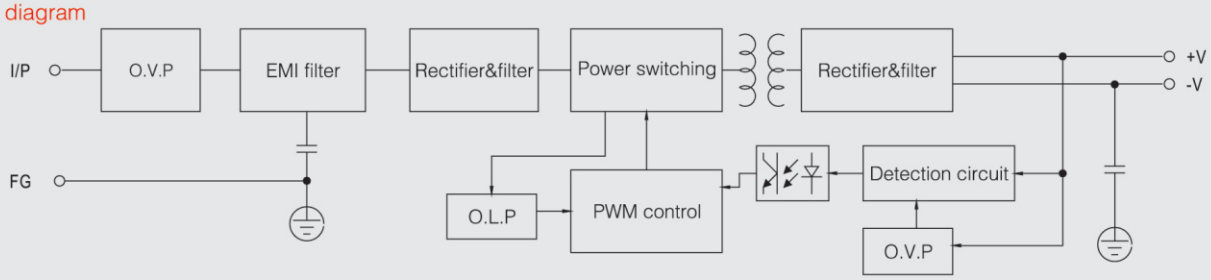


## Derating curve

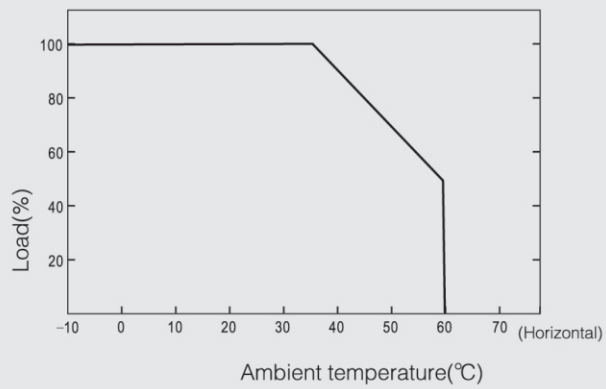


## Static characteristic

