Smun
XIMENG ELECTRIC

Zhejiang Ximeng Electronic Technology Co.,ltd.

320W Single Output PFC Power Supply RSP-320 Series



Size：215*115*30mm

Features:

- Universal full range AC input power
- With active PFC function, PFC> 0.95
- Protections:Short circuit/Overload/Over voltage/Over temperature
- Forced air cooling by built-in DC Fan with fan speed
- 43,000 hours of continuous operation at 25 ℃
- 100% full load burn-in test
- Efficiency up to 90%
- 5 years warranty

SPECIFICATION

ISO9001:4008

Model		RSP-320-12	RSP-320-15	RSP-320-24	RSP-320-36	RSP-320-48
Output	DC VOLTAGE	12V	15V	24V	36V	48V
	RATED CURRENT	26.7A	21.4A	13.4A	8.9A	6.7A
	CURRENT RANGE	0 ~ 26.7A	0 ~ 21.4A	0 ~ 13.4A	0 ~ 8.9A	0 ~ 6.7A
	RATED POWER	320.4W	321W	321.6W	320.4W	321.6W
	RIPPLE&NOISE(Max)NOTE.2	150mVp-p	150mVp-p	150mVp-p	220mVp-p	240mVp-p
	VOLTAGE ADJ.RANGE	10 ~13.2V	13.5~ 18V	20 ~ 26.4V	32.4 ~ 39.6V	41 ~ 56V
	VOLTAGE TOLERANCE NOTE.3	±2.0%	±1.0%	±1.0%	±1.0%	±1.0%
	LINE REGULATION	±0.5%	±0.3%	±0.2%	±0.2%	±0.2%
	LOAD REGULATION	±1.0%	±0.5%	±0.5%	±0.5%	±0.5%
	SETUP,RISE TIME	1500ms, 50ms/230VAC 3000ms, 50ms/115VAC(full load)				
	HOLD UP TIME (Typ.)	8ms(full lod) 230VAC /115VAC				
INPUT	VOLTAGE RANGE NOTE.4	88 ~ 264VAC or 124 ~ 370VDC				
	FREQUENCY RANGE	47 ~ 63Hz				
	PFC(Typ.)	PF>0.95/230VAC PF>0.98/115VAC(full load)				
	EFFICIENCY(Typ.)	88%	88.5%	89%	89.5%	90%
	AC CURRENT(Typ.)	4A/115VAC 2A/230VAC				
	INRUSH CURRENT(Typ.)	20A/115VAC 40A/230VAC				
	LEAKAGE CURRENT	<1.5mA / 240VAC				
PROTECTION	OVERLOAD	115 ~ 135% rated output power				
		Protection type:Hiccup mode,recovers automatically after fault condition is removed				
	OVER VOLTAGE	13.8 ~ 16.2V	18.8 ~ 21V	27.6 ~ 32.4V	41.4 ~ 48.6V	58.4 ~ 68V
		Protection type:Turn off output voltage,recovers automatically after fault condition is removed				
	OVER TEMPERATURE	Protection type:Turn off output voltage,recovers automatically after temperature drops				
ENVIRONMENT	WORKING TEMP.	-30 ~ +70℃ (Refer to "derating curve")				
	WORKING HUMIDITY	20 ~ 90% RH non-condensing				
	STORAGE TEMP.,HUMIDITY	-40 ~ +85℃, 10 ~ 95% RH				
	TEMP.COEFFICIENT	±0.03%/℃ (0 ~ 50℃)				
	VIBRATION	10 ~ 500Hz, 2G 10 min/1cycle, 60min.each X、Y、Z axes				
SAFETY (Note4)	SAFETY STANDARDS	GB4943.1, EN 60950.1 APPROVED				
	WITHSTAND VOLTAGE	I/P-O/P:3KVAC I/P-FG:2KVAC O/P-FG:0.5KVAC				
	ISOLATION RESISTANCE	I/P-O/P, I/P-FG, O/P-FG:100M Ohms / 500VDC / 25℃/ 70% RH				
	EMC EMISSION	MEET EN55032 (CISPR32) Class B, EN62368-3-2,-3				
	EMC IMMUNITY	MEET EN62368-4-2,3,4,5,6,8,11, EN55035				
OTHERS	MTBF	≥206.5K hrs MIL-HDBK-217F(25℃)				
	DIMENSION	215*115*30mm (L*W*H)				
	PACKING	0.9Kg; 30pcs/22.5Kg/0.78CUFT				

NOTE

1. All parameters NOT specially mentioned are measured at 230VAC input,rated load and 25℃ of ambient temperature.
2. Ripple&noise are measured at 20MHz of bandwidth by using a 12 "twisted pair -wire terminated with a 0.1uf and 47uf parallel capacitors.
3. Tolerance:includes set up tolerance,line regulation and load regulation.
4. Derating output is required under low input voltage. Please refer to the derating curve for details.
5. The power supply should be considered as a part of the components in the system. All EMC tests will test the test samples on a metal iron plate with a thickness of 1mm, a length of 360mm * width of 360mm.

Http://www.smun.com TEL:0577-62657774

320W SINGLE OUTPUT PFC POWER SUPPLY RSP-320 Series

Mechanical Specification

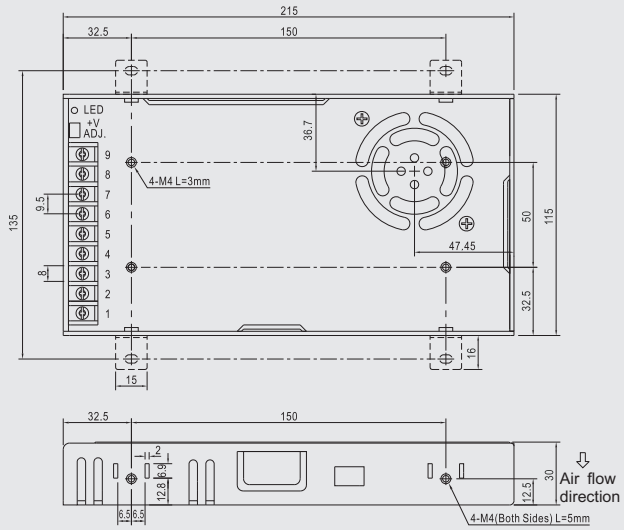

Unit:mm

Terminal Pin No.Assignment:

Pin No.	Assigment	Pin No.	Assigment
1	AC/L	4-6	DC OUTPUT -V
2	AC/N	7-9	DC OUTPUT +V
3	FG ⏚		

Block Diagram

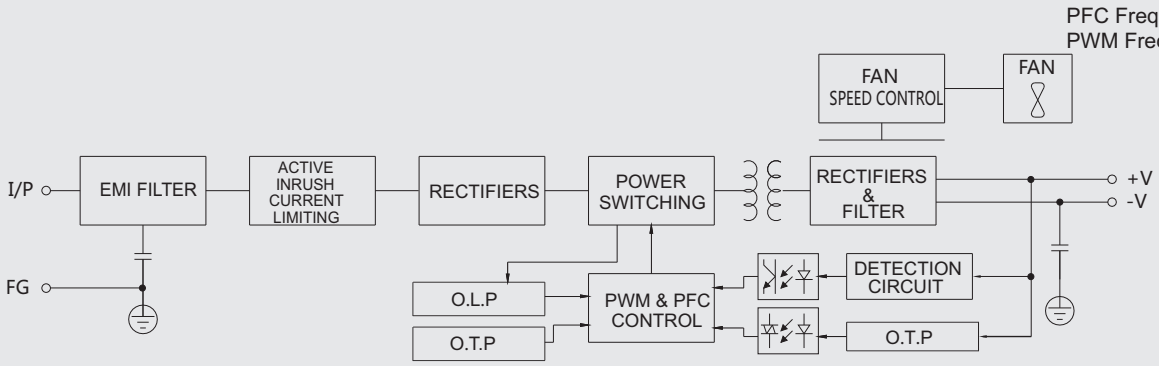

Derating Curve

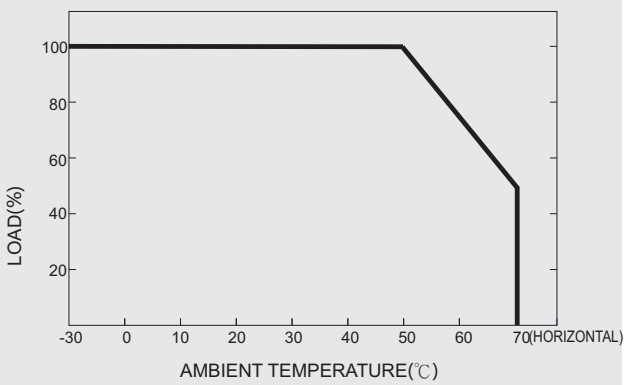

Static Characteristic

